AS522: Outdoor Siren and Beacon Installation Manual

ARITECH

CAUTION: NiCd Battery
Danger of explosion if battery is incorectly replaced. Replace only with the same or equivalent type recommended by the manufacturer.

ATTENTION: This product contains a NiCd battery. This battery may be recyclable. It may be illegal to dispose of this battery improperly under national regulations. Check with your local authority for the disposal and recycling options.

Lens:
(Optional: several lens colours available)

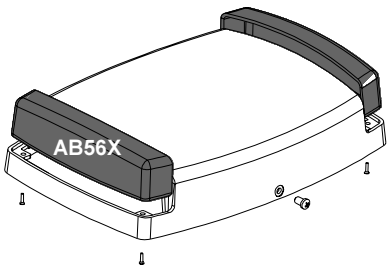

Inner cover:
(Optional)

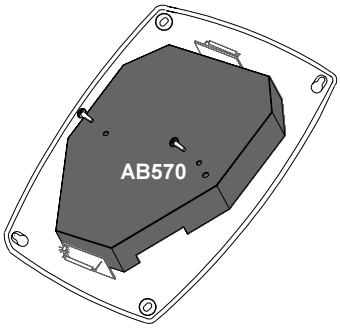

Lead acid battery*: Siren vertical
(Optional)

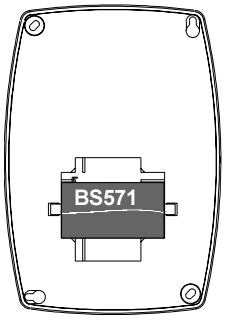

Lead acid battery*: Siren horizontal
(Optional)

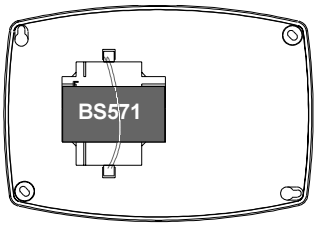

(* Ex-factory = NiCd battery)

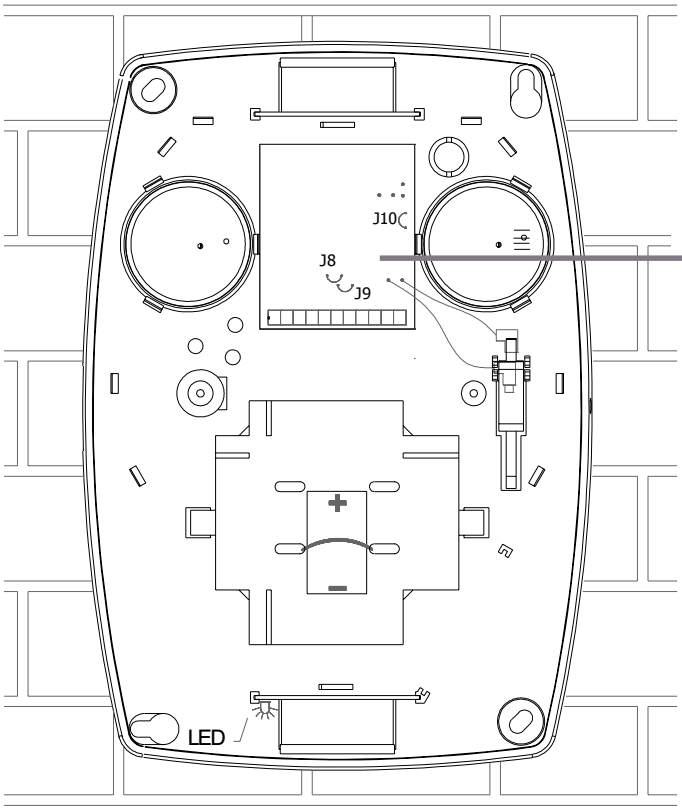

Jumpers:

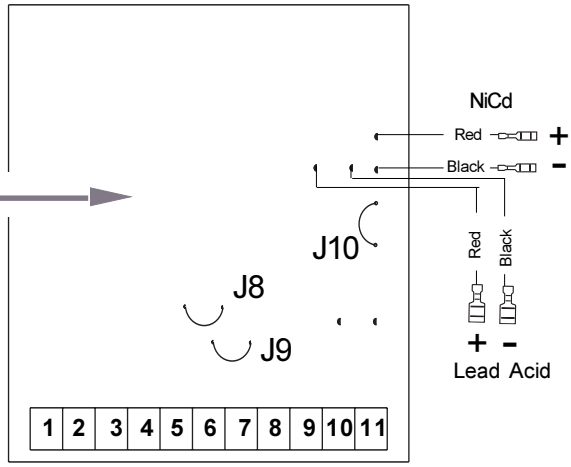

1	2	3 +	4 -	5	6	7 +	8 -	9	10	11
Beacon active 0 V	Siren active 0 V	10-14.5 V	GND	Tamper		Beacon		Piezo		

Standard ex-factory settings:

Siren Timing	
20 minutes	

Beacon	
Terminal 1	
0 V	Active

Siren	
Terminal 2	
0 V	Active

Jumpers:

Tamper Loop (T5/T6)			
J8	J9	Tamper	EOL
Ex-factory		GND	-
✂		GND	4700 Ω
	✂	Isolated	-
✂	✂	Isolated	4700 Ω

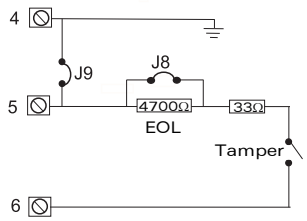

J10	LED	
Ex-factory	Red = Alarm	Green = OK
✂	Red	Green

Wiring procedure:

First, wire the control panel (power down) to the siren as shown, before connecting the battery. When the battery is connected for the first time, the siren will give a short beep. The siren cannot be activated until all inputs (input power and hold-off voltages) are correct. The siren will be activated if the input power is removed or drops significantly or if the siren hold-off voltage is removed.

When using an Aritech control system or any other control system which requires 4k7 end of line resistor, cut J8 to use built in end of line feature.

Typical single-siren wiring for Irish panels:

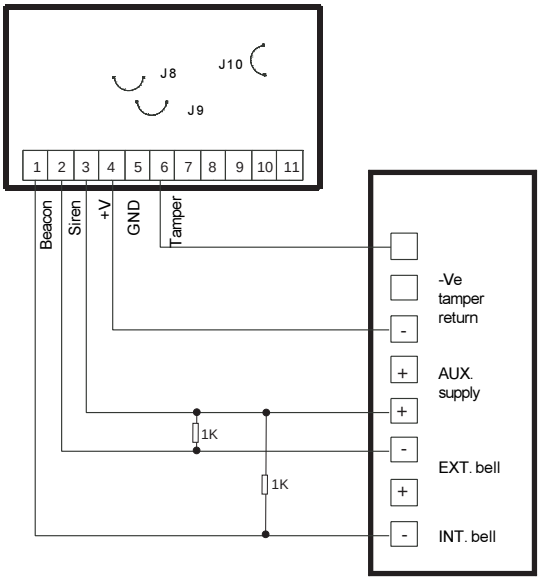

2-siren wiring configuration:

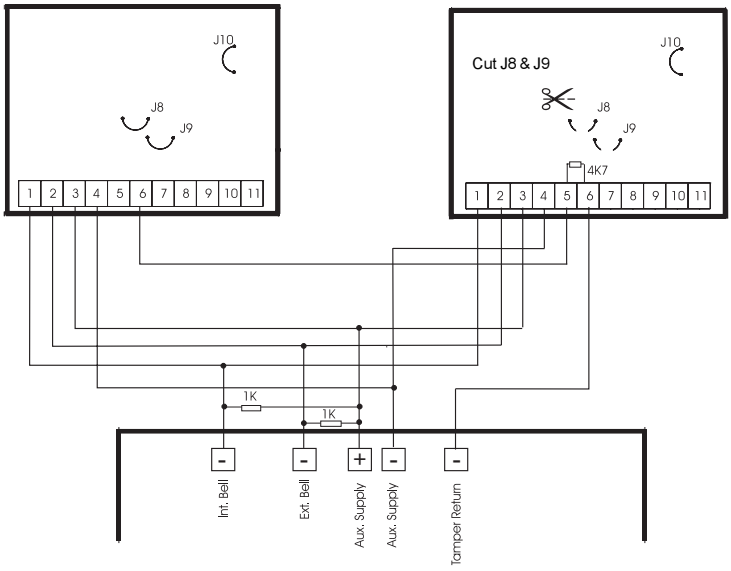

Technical data:

Supply voltage:	10.0 V - 14.5 VDC
Standby current:	40 mA (typical)
Operating current:	350 mA (typical) (incl. beacon)
Sound output:	114 dB at 1 m; 85 dB at 3 m
Frequency sweep:	0.58 - 3 kHz
Operational timer:	20' (ex-factory)
Working temperature:	-25°C to +55°C
Weight:	1 kg
Dimensions:	300 x 210 x 55 mm
Standards:	According to: IS 199

Recommended battery:		
- Lead acid: (optional)	Type	12 V - 1.2 Ah
	Load voltage	min 13.6, max 14.2 VDC
- NiCd: (ex-factory)	Type	6 V - 280 mAh
	Load current	20 mA (typical)
Tamper:	28 VDC; max. 100 mA	
Beacon:		
Operating current:	110 mA	
Light output:	100.000 peak lumens	
Life time:	1.000.000 flashes	
Flash rate:	60/minute	
Spike suppression network:	Standard fitted	

© 2000 Interlogix BV. All rights reserved.

ISO certified
14 4420 999-1